Nauticam
innovation underwater

NA - NEX5N

Underwater Camera Housing

Instruction manual

Foreword

Thank you for your purchase of a NAUTICAM camera housing.

At NAUTICAM, we pride ourselves on the ability to recognise the requirements of professional as well as amateur underwater photographers and fulfill them through the innovative designs of our products. We strive to achieve a high level of user-friendliness by allowing stress-free installation and easy operation of all important functions of the camera.

Each NA-NEX5N housing is individually inspected and water pressure tested to ensure optimum quality.

Please read this manual carefully before using the housing, this will maximise its performance as well as its lifetime.

Warranty

1. All NAUTICAM Products are warranted against any material and manufacturing defects for one year from the date of purchase for consumer use.
2. NAUTICAM accepts no liability for any damage to and defects in the housing caused by improper use and/or poor maintenance; it is the responsibility of the owner to carefully follow the instructions in this manual.
3. NAUTICAM does not hold responsibility for damage, of any nature, to any equipment used with and/or placed within the housing.
4. NAUTICAM accepts no liability for any loss of captured images or the inability to capture images even if it is due to the malfunctioning or leakage of the housing.
5. This warranty only applies to products purchased from authorised NAUTICAM dealers and does not extend beyond the original retail purchaser.
6. Unauthorised modifications and/or repairs of the housing will automatically invalidate this warranty.
7. To return products for service, please contact our regional distributor, normally you would need to notify them by email first and ship them the product by registered mail, along with your contact details and a brief description of the defect.

Package Contents

1. NA-NEX5N housing
2. Optical fibre mount with screws
3. Instruction manual
4. Spare silicone rubber housing main o-ring
5. O-ring remover
6. CR2032 battery (for moisture alarm)
7. Lubricant
8. Set of Allen keys

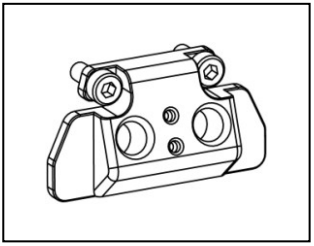

Optical fibre mount with screws

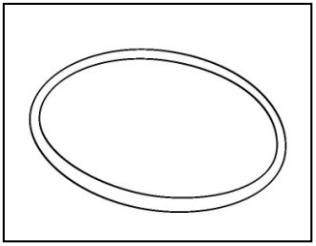

Spare silicone rubber o-ring

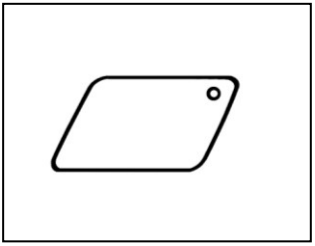

O-ring remover

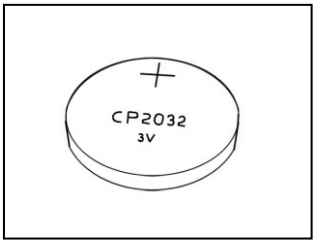

CR2032 battery

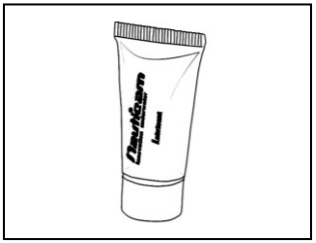

Lubricant

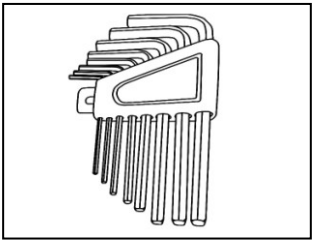

Set of Allen keys

Precautions

1. A water-tight test without the camera inside the housing is highly recommended when using the system for the first time and after the changing of port and O-ring(s).
2. Do not use lubricants from other brands with the silicone rubber O-ring on this housing, only use the lubricant provided by NAUTICAM.
3. Discontinue use immediately should you notice any leakage.
4. Store the housing in a robust, shock-proof container during transportation; avoid transporting with any equipment, such as a camera, inside the housing.
5. When travelling by air, do not close the housing if the port is installed, as this may lead to a pressure difference between the atmosphere and inside the housing.
6. Care must be taken when opening the housing, as pressure may build up inside the housing which increases the opening force.
7. Do not open the product in a wet or sandy environment. Protect the interior from moisture and debris in order to prevent malfunction or leakage.
8. Do not store the product in an environment of high humidity.
9. Do not leave the housing and the camera in direct sunlight for prolonged periods.
10. Keep out of reach of children, failure to do so could result in injury.
11. Defective products should be shipped to our distributors for service, unauthorized disassembling and/or modifications could result in malfunction or leakage.

Table of Contents

Specifications	6
Identification of Parts	7
Preparation of the Housing	10
Opening and Locking the Housing	12
Installing the Camera	13
Mounting the Port	15
Care and Maintenance	17

Specifications

Construction	Housing body:	Aluminium alloy
	Surface treatment:	Hard anodised
	Display window:	Abrasion resistant polycarbonate
Dimensions	Width:	140 mm
	Height:	118 mm
	Depth:	68 mm
Weight	Approx. 0.78 kg (without camera)	
Buoyancy	Slightly negative	
Depth rating	100 metres	
Features	Moisture alarm:	Blinking LED and audible alarm
	TTL capability:	Optical fibre mount included for external strobes connection, utilising the camera's pop-up flash as trigger.
	Port mount:	Patented easy port installation system.
	Rocker switch:	Enable easy access Playback and Movie functions.
	Flash up/off lever:	Allows the camera's built-in flash to be disabled underwater.

Identification of Parts

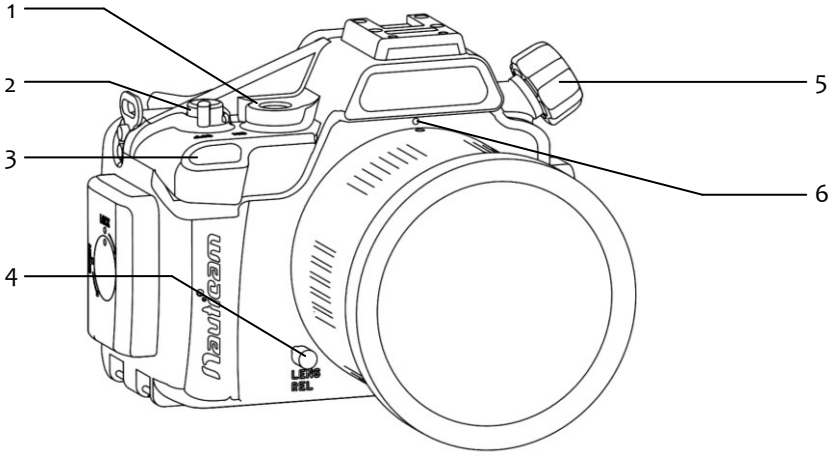

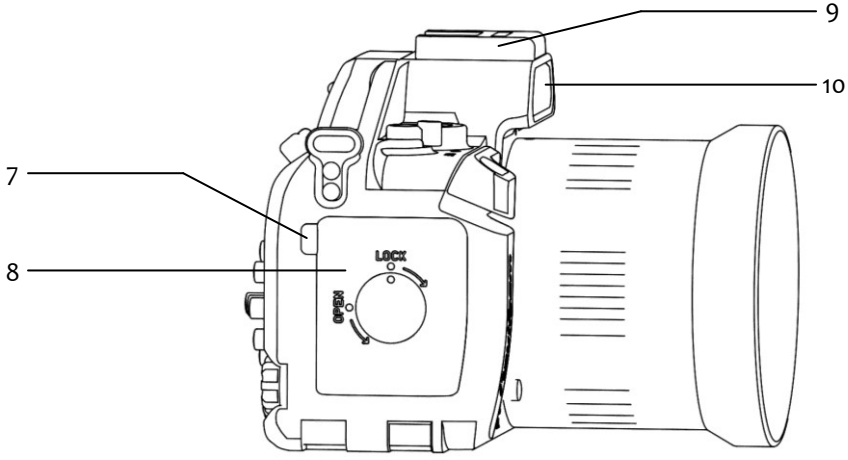

1	M10 strobe mounting base	6	Port alignment index
2	On/Off switch	7	Housing lock safety button
3	Shutter release key	8	Housing lock
4	Lens release button	9	Focus light mount
5	Zoom/focus knob	10	Internal flash window

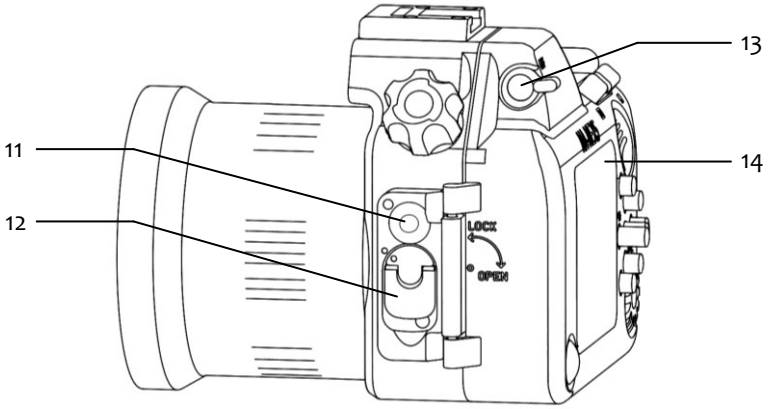

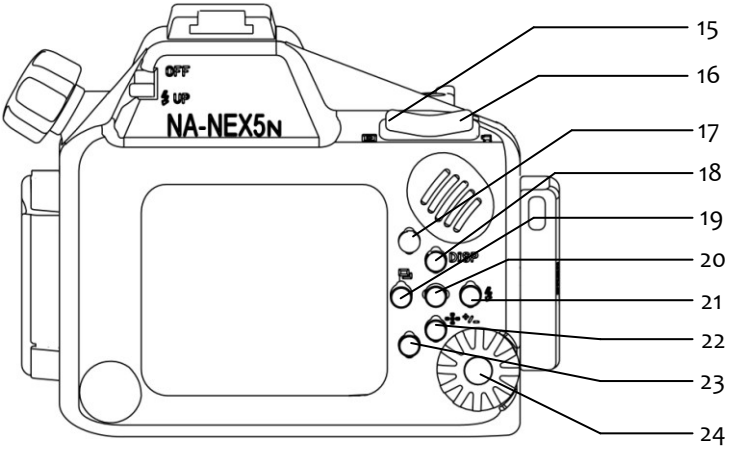

11	Port lock/release safety button	18	Up selection button
12	Port lock/release latch	19	Left selection button
13	Flash up/off lever	20	Soft key C button
14	LCD monitor window	21	Right selection button
15	Playback rocker switch	22	Down selection button
16	Movie rocker switch	23	Soft key B button
17	Soft key A button	24	Control wheel

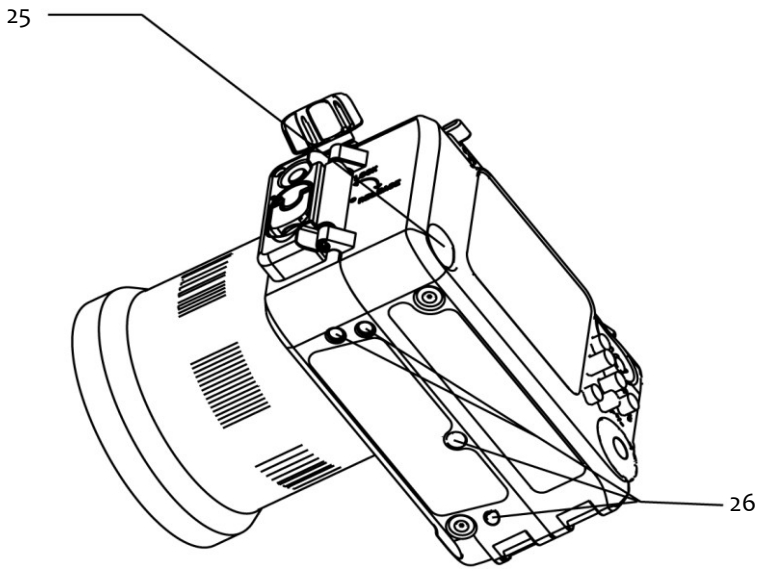

25	Moisture alarm window	26	1/4”–20UNC tripod socket x 4

Tips :

When using Nikonos lenses, the *Release w/o Lens* function of the NEX-5 camera must be enabled:

Go to *Menu,* Select *Setup*, scroll to *Release w/o Lens*, then select *Enable.*

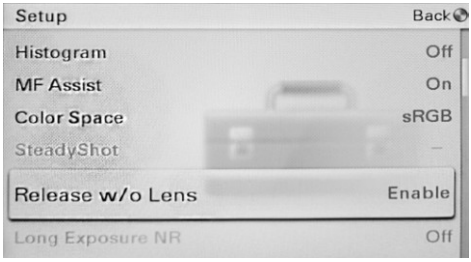

Preparation of the Housing

1. After verifying that the housing main O-ring is in good condition, lightly coat it with the lubricant provided.
2. Make sure the O-ring groove located in the front part of the housing is free from any foreign material; the groove can be cleaned with the aid of a microfiber cloth.
3. Place the main O-ring into the groove.
4. To install the optical fibre mount for external strobe connection, fasten it with the screws provided to the threaded sockets in the focus light mount.

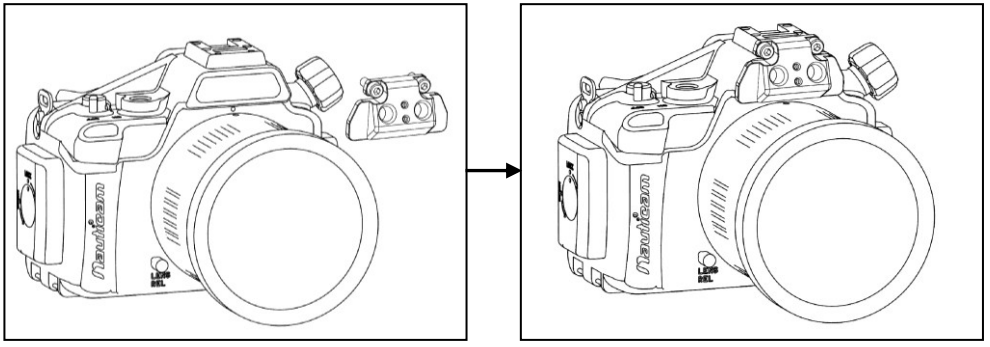

Setting up the moisture alarm

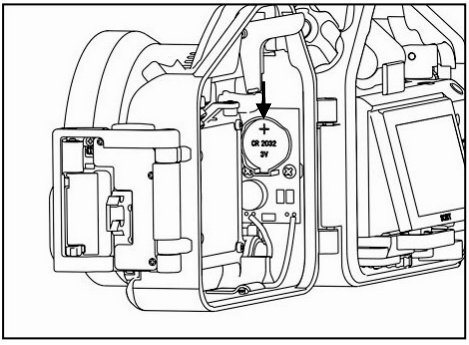

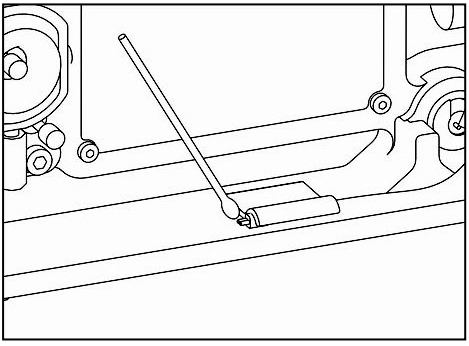

1. Install the CR2032 battery provided into the battery compartment on the circuit board inside the rear part of the housing.

2. Test the alarm by contacting the two wires near the bottom of the housing with a damped cotton bud; the alarm should start giving out a repeating “beep” sound along with a flashing red light. The “beep” sound and the light should keep on going for 5 seconds after the removal of the damped cotton bud.

Opening and locking the housing

To open the housing:

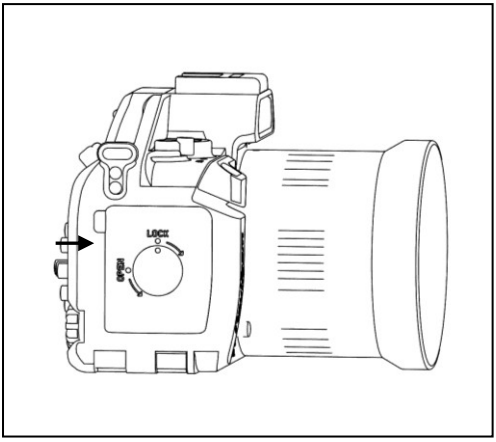

1. Press the housing lock safety button.

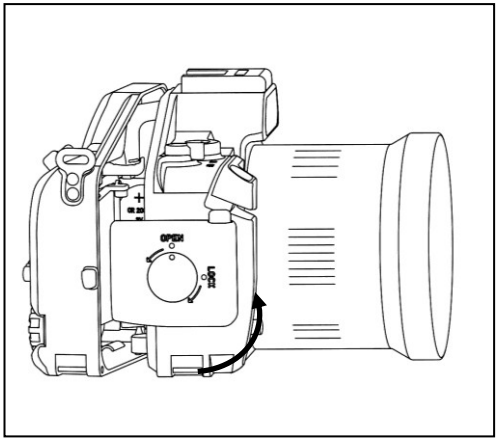

2. Turn the housing lock anti-clockwise for 270°.

To lock the housing:

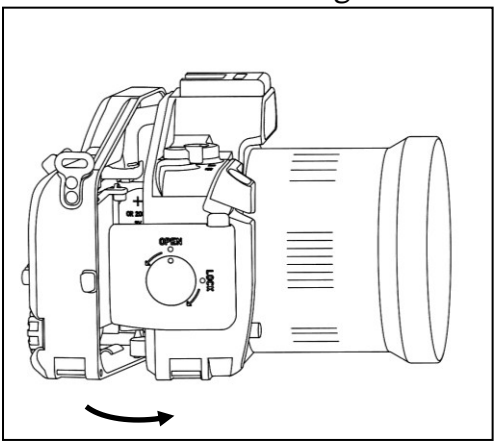

3. Close the housing.

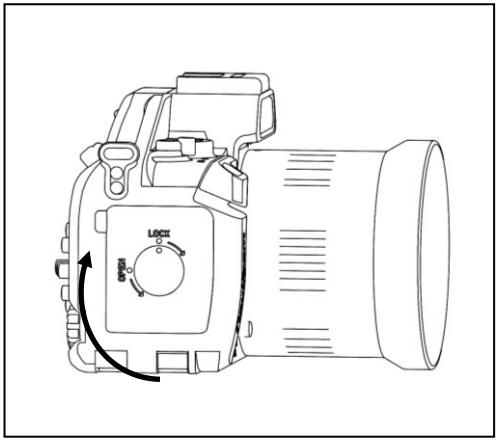

4. Turn the housing lock clockwise for 270°, until the lock reaches the "lock" position as shown. Confirm that the white indicator line on the safety button is visible.

Installing the Camera

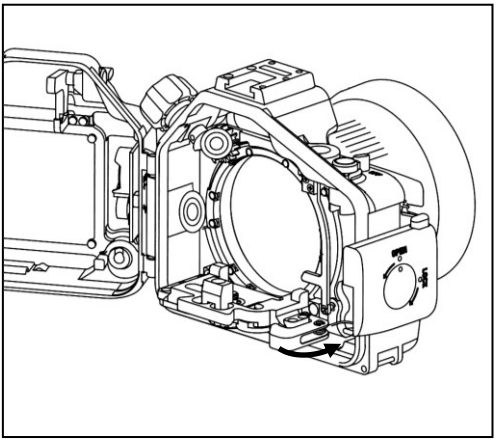

1. Disengage the camera saddle lock by sliding it to the right.

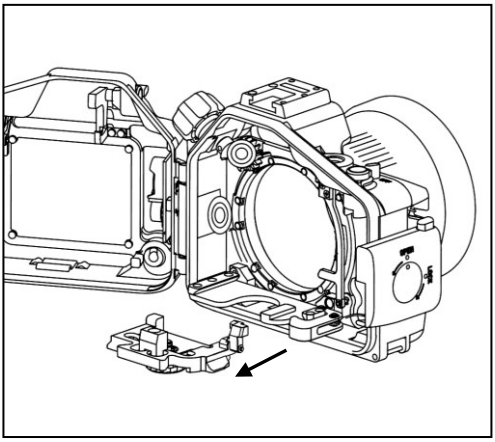

2. Remove the camera saddle from the housing.

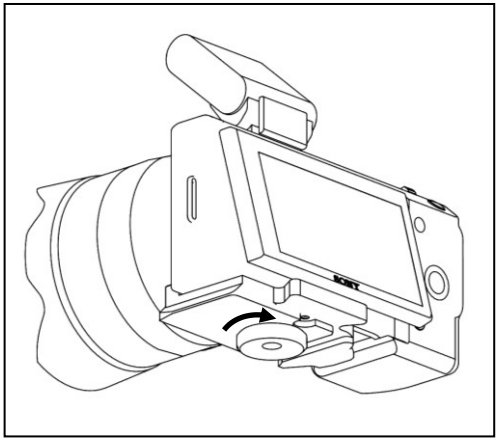

3. Tilt the LCD monitor of the camera upwards*, then attach the saddle to the camera by tightening the screw to the tripod socket of the camera.

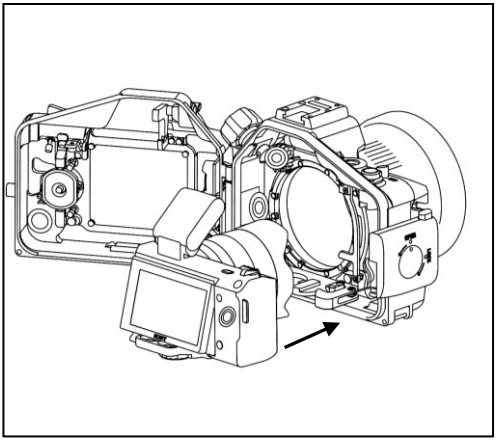

4. Make sure the ON/OFF switches of both the camera and the housing are in the “OFF” position.
5. Mount the camera by sliding the attached saddle along the rail in the housing until it cannot go in any further and the saddle lock moves back to the engaged position.

6. Confirm that all the controls of the housing are correctly engaged.

* If you do not want to have the LCD monitor tilted, remove the LCD monitor support from the camera saddle before attached it to the camera:

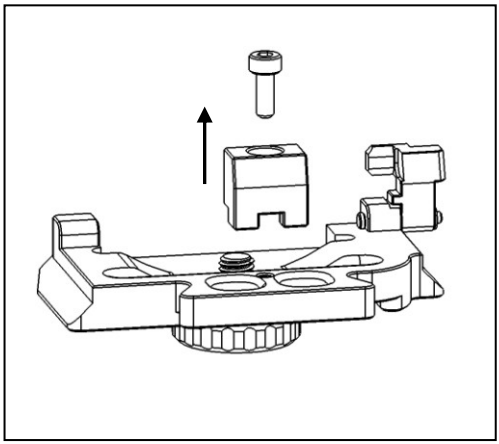

Mounting the Port

Please refer to the NAUTICAM system port chart for a range of compatible ports.

1. Remove the O-ring from the port, inspect for any damage and lightly coat it with the provided lubricant before placing it back into its groove.

2. Verify that the port opening of the housing is clean and free from foreign material.

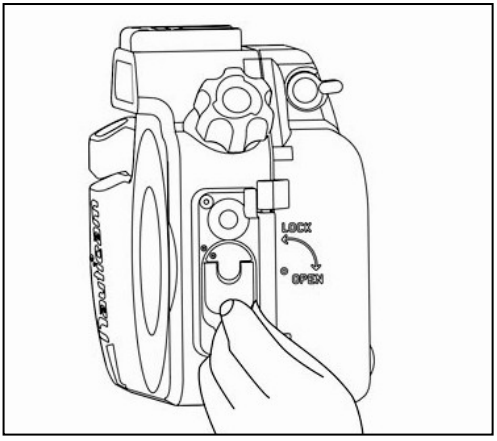

3. Lift the port lock/release latch.

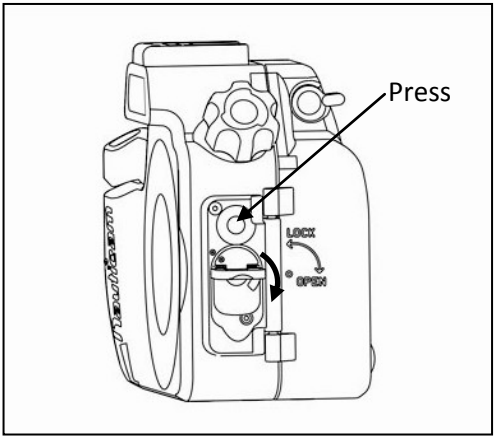

4. While pressing down the port lock/release safety button, turn the port lock/release latch clockwise for 135° until the circle mark on the latch aligns with the open index on the rear housing.

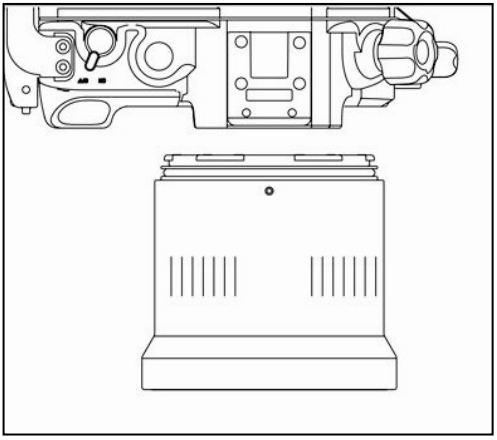

5. Align the circle indices of the port and the housing.

6. Gently push the port into the port opening of the housing, until it cannot go in any further.

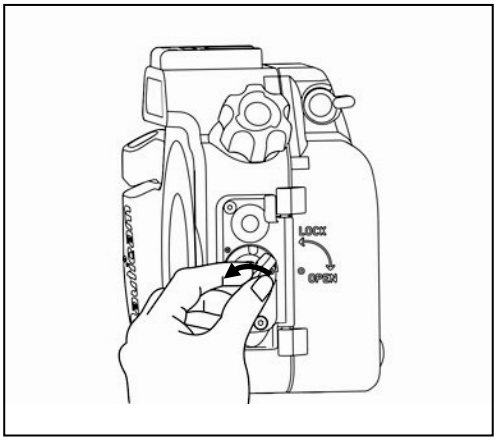

7. Turn the port lock/release latch anti-clockwise for 135° to the “Lock” position (the position as shown in figure 3).

8. To remove the port from the housing, repeat steps 3 and 4 then gently pull it out.

Care and Maintanence

1. Soak the housing system in fresh water after each salt water use, during which all control buttons/knobs should be operated a few times to avoid the accumulation of salt residue; wipe the housing with a towel before opening.
2. After each day of diving, it is advisable to have the main O-ring in the front part of the housing removed from its groove with the O-ring remover and inspected for damage. Also check that the O-ring retains its original circular shape; never stretch the O-ring excessively or remove it with a sharp object. The O-ring groove should be cleaned to ensure it is free from any salt deposit or foreign material; lightly coat the O-ring with the provided lubricant before reinstalling it in the groove. A damaged O-ring should be discarded immediately and replaced only with one that is provided by NAUTICAM.
3. Replace the main O-ring annually.
4. It is recommended that you ship the housing to our distributor for a complete overhaul every year or after every 200 dives.

NAUTICAM International Limited
Room 2203,
CCT Telecom Building,
11 Wo Shing Street,
Fotan, HONG KONG

Email: enquiry@nauticam.com
Tel: +852 2690 2711
Fax: +852 2690 9778